FLOW SYMBOLS

VALVES

- BALL VALVE
- GATE VALVE
- PLUG VALVE
- GLOBE VALVE
- CHECK VALVE
- BUTTERFLY VALVE
- NORMALLY CLOSE (SHADE PRESSURE SIDE)
- PIG VALVE
- ANGLE VALVE
- THREE-WAY VALVE
- FOUR-WAY VALVE
- HAND OPERATED VALVE
- DOUBLE BLOCK AND BLEED VALVE
- NEEDLE VALVE
- GAUGE VALVE
- 5-VALVE MANIFOLD

SAFETY DEVICES

- RELIEF VALVE - PILOT OPERATED
- REFINE VALVE - CONVENTIONAL
- RUPTURE DISC
- PRESSURE - VACUUM VENT
- PRESSURE - VACUUM HATCH
- FLAME ARRESTOR
- STEAM TRAP VENT

ACTUATORS

- DIAPHRAGM
- PISTON - PNEUMATIC
- HYDRAULIC
- SOLENOID
- MOTOR
- DIAPHRAGM - SELF OPERATED
- DIAPHRAGM - MANUAL CONTROL

METERS

- POSITIVE DISPLACEMENT
- TURBINE
- ORIFICE - QUICK CHANGE
- ORIFICE - FLANGES
- STRAIGHTENING VANES
- PITOT TUBE OR ANNUBAR
- ROTAMETER
- CORIOLIS

INSTRUMENT RELAYS

- THREE WAY - NO PORT, NC PORT, COMMON PORT
- HIGH SIGNAL SELECT
- LOW SIGNAL SELECT
- MULTIPLY
- SIGNAL ADDER / SIGNAL BOOSTER
- SIGNAL CONVERTER
- SUBTRACT
- SQUARE ROOT EXTRACTOR

INJECTION QUILL

CI — CHEMICAL INJECTION CONNECTION WITH QUILL SUPPLIED COMPLETE WITH MONO BLOCK VALVE ASSEMBLY AND CHECK VALVE

LINES

- MAJOR PROCESS LINES
- MINOR PROCESS LINES
- MAJOR PROCESS LINES (FUTURE)
- MINOR PROCESS LINES (FUTURE)
- PNEUMATIC SIGNAL
- ELECTRICAL SIGNAL
- INSULATED LINES H = HOT C = COLD P.P. = PERSONAL
- FLEXIBLE LINES
- SKID LIMITS
- CAPILLARY TUBE
- HYDRAULIC TUBE
- INTERNAL SYSTEM LINK

MISCELLANEOUS

- FIXED CHOKE - ANGLE BODY
- ADJUSTABLE CHOKE - ANGLE BODY
- FIXED CHOKE - STRAIGHT BODY
- Y - STRAINER
- TEE STRAINER
- BASKET STRAINER
- TEMPORARY STRAINER
- TEST INSERT - BLEED RING
- SPECTACLE BLIND - OPEN
- SPECTACLE BLIND - CLOSED
- AUTOMATIC DRAINER - TRAP
- QUICK CONNECT FITTING
- LUBRICATOR
- FILTER
- OPEN DRAIN - HUB
- ANNUNCIATOR
- PIPING CLASS CHANGE/SPEC. BREAK
- PIPING REDUCER - CONCENTRIC
- PIPING REDUCER - ECCENTRIC
- SIGHT GLASS
- BUTT WELD CAP
- THREADED CAP
- SPECIAL ITEM

CONNECTIONS

- FLANGED
- THREADED
- SOCKET WELD
- BUTT WELD
- FIELD WELD
- UNION
- VICTAULIC
- DRESSER
- GRAYLOC
- SWIVEL JOINT
- FLEXIBLE
- BLEED RING

CONTINUATIONS

- X-000 TO SHEET X-000 CONT.
- X-000 FROM SHEET X-000 CONT.

PIPE LINE DESCRIPTION

AKABP-4"-P-015-E03

- CORROSION ALLOWANCE
- PIPE CLASS
- LINE NUMBER
- SERVICE
- SIZE
- LOCATION

LINE SERVICES

GL	GLYCOL	HM	HEAT MEDIA
PF	PROCESS GAS & LIQUID	UA	UTILITY AIR
F	FLARE, RELIEF & VENTS	POW	POTABLE WATER
IG	INSTRUMENT GAS	FW	FIRE WATER
UG	UTILITY GAS	C	CHEMICAL
FG	FUEL GAS	DF	DIESEL FUEL
BG	BLANKET GAS	H	HYDRAULIC
IA	INSTRUMENT AIR	PL	PIPELINE
AD	ATMOSPHERIC DRAIN	D	PRESSURE DRAIN
P	PROCESS GAS	ST	STEAM
PO	PROCESS OIL	VA	ATMOS. VENT
PW	PROCESS WATER	B	BLOWDOWN

TEMP. SERVICES

1	-50°F MIN
2	-100°F MIN

PIPING CLASS

CLASS	FLANGE RATING	PRIMARY SERVICE
A	ANSI 150#	HYDROCARBONS,GLYCOL, & PROD. WATER
B	ANSI 300#	HYDROCARBONS, PROD. WATER & GLYCOL
C	ANSI 400#	HYDROCARBONS,GLYCOL & PROD. WATER
D	ANSI 600#	HYDROCARBONS & PROD. WATER
E	ANSI 900#	HYDROCARBONS & INJECTION WATER
F	ANSI 1500#	HYDROCARBONS & INJECTION WATER
G	ANSI 2500#	HYDROCARBONS
J	API 5000#	HYDROCARBONS
K	API 10000#	HYDROCARBONS
L	API 15000#	INSTRUMENT AND UTILITY AIR
U	ANSI 150#	POTABLE WATER AND ATM. DRAINS
Q	ANSI 150#	FIREWATER
R	(PVC)	SEWAGE
S	-	SOUR SERVICE

NOTE:
ANSI PRESSURE - TEMPERATURE RATINGS ARE IN ACCORDANCE WITH THE LATEST ANSI B16.5 PUBLICATION DATED 1981, MATERIAL GROUP 1.1 (A-105 CARBON STEEL). PRESSURE - TEMPERATURE RATINGS FOR ALL ANSI CLASS VALVES SHOULD BE VERIFIED TO INSURE COMPLIANCE WITH THE LATEST ANSI RATINGS.

VALVE IDENTIFICATION

BV -1001

- SERIAL NUMBER
- LOCATION 1-BBDU, 2-ELEPA, 3-AKABEL
- VALVE TYPE
  - BV - BALL VALVE
  - GL - GLOBE VALVE
  - PL - PLUG VALVE
  - GT - GATE VALVE
  - CK - CHECK VALVE
  - BT - BUTTERFLY VALVE

INSTRUMENT IDENTIFICATIONS AND ABBREVIATIONS

ACG	COMBUSTIBLE GAS DETECTOR
AD	AUTOMATIC DRAIN
AE	ANALYZER ELEMENT
AHS	HYDROGEN SULFIDE GAS DETECTOR
AHT	HEAT DETECTOR
AI	ANALYSIS INDICATOR
ARV	AIR RELEASE VALVE
AS	AUTOMATIC SWITCH
ASH	COMBUSTIBLE GAS DETECTOR
ASM	SMOKE DETECTOR
AT	ANALYSIS TRANSMITTER
AUV	ULTRAVIOLET FLAME DETECTOR
A/S	AIR SUPPLY
BCP	BURNER CONTROL PANEL
BDV	BLOWDOWN VALVE
BF	BLIND FLANGE
BSD	BURNER SHUTDOWN
BSL	BURNER SENSOR LOW
BSW	BS&W MONITOR
CC	CORROSION COUPON
CH	CHOKE
CONC	CONCENTRIC
CSC	CAR SEAL CLOSED
CSO	CAR SEAL OPEN
DAH	DENSITY ALARM HIGH
DE	DENSITY ELEMENT
DI	DENSITY INDICATOR
DR	DENSITY RECORDER
DS	DENSITY SWITCH
DT	DENSITY TRANSMITTER
DWI	DEW POINT INDICATOR
DWR	DEW POINT RECORDER
DWT	DEW POINT TRANSMITTER
ECC	ECCENTRIC
EH	EXHAUST HEAD
ESD	EMERGENCY SHUTDOWN
FA	FLAME ARRESTOR
FAH	FLOW ALARM HIGH
FAL	FLOW ALARM LOW
FC	FAIL CLOSE
FCV	FLOW CONTROL VALVE
FE	FLOW ELEMENT
FG	SIGHT FLOW INDICATOR
FI	FLOW INDICATOR
FIC	FLOW INDICATING CONTROLLER
FIT	FLOW INDICATING TRANSMITTER
FL	FAIL LAST
FM	FLOW METER
FO	FAIL OPEN
FO	FLOW ORIFICE
FQ	FLOW TOTALIZER
FQI	FLOW TOTALIZING INDICATOR
FR	FLOW RECORDER
FS	FLOW SWITCH
FSH	FLOW SENSOR HIGH
FSL	FLOW SENSOR LOW
FSV	FLOW SAFETY (CHECK) VALVE
FT	FLOW TRANSMITTER
FY	FLOW RELAY
FX	STRAINER
HC	HAND CONTROLLER
HCV	HAND CONTROL VALVE
HIC	HAND INDICATING CONTROLLER
HOA	HAND-OFF-AUTO SELECTOR
HS	HAND SWITCH
IGN	IGNITION
LAH	LEVEL ALARM HIGH
LAHH	LEVEL SHUTDOWN HIGH
LAL	LEVEL ALARM LOW
LALL	LEVEL SHUTDOWN LOW
LC	LEVEL CONTROLLER
LC	LOCK CLOSED
LCV	LEVEL CONTROL VALVE
LG	LEVEL GAUGE
LI	LEVEL INDICATOR
LIC	LEVEL INDICATING CONTROLLER
LO	LOCK OPEN
LS	LEVEL SWITCH
LSH	LEVEL SENSOR HIGH
LSL	LEVEL SENSOR LOW
LT	LEVEL TRANSMITTER
LUB	LUBRICATOR
LY	LEVEL RELAY
MCC	MOTOR CONTROL CENTER
MW	MANWAY
MX	MIXER
NC	NORMALLY CLOSED
NLL	NORMAL LIQUID LEVEL
NO	NORMALLY OPEN
NOL	NORMAL OIL LEVEL
NWL	NORMAL WATER LEVEL
NY	INSTRUMENT RELAY
PAH	PRESSURE ALARM HIGH
PAHH	PRESSURE SHUTDOWN HIGH
PAL	PRESSURE ALARM LOW
PALL	PRESSURE SHUTDOWN LOW
PC	PRESSURE CONTROLLER
PCV	PRESSURE CONTROL VALVE
PDAH	DIFF. PRESSURE ALARM HIGH
PDAL	DIFF. PRESSURE ALARM LOW
PDC	DIFF. PRESSURE CONTROLLER
PDI	DIFF. PRESSURE INDICATOR
PDR	DIFF. PRESSURE RECORDER
PDS	DIFF. PRESSURE SWITCH
PDSH	DIFF. PRESSURE SENSOR HIGH
PDSL	DIFF. PRESSURE SENSOR LOW
PDIT	DIFF. PRESSURE INDICATING TRANSMITTER
PDT	DIFF. PRESSURE TRANSMITTER
PI	PRESSURE INDICATOR
PIC	PRESSURE INDICATING CONTROLLER
PIT	PRESSURE INDICATING TRANSMITTER
PLC	PROGRAMMABLE LOGIC CONTROLLER
PP	PERSONNEL PROTECTION
PR	PRESSURE RECORDER
PS	PRESSURE SWITCH
PSE	RUPTURE DISC
PSH	PRESSURE SENSOR HIGH
PSL	PRESSURE SENSOR LOW
PSV	PRESSURE SAFETY VALVE
PT	PRESSURE TRANSMITTER
PVV	PRESSURE VACUUM VENT
PVSV	PRESSURE VACUUM SAFETY VALVE
PV	PRESSURE VALUE
PY	PRESSURE RELAY
RO	RESTRICTION ORIFICE
RS	REMOTE SWITCH
RTU	REMOTE TERMINAL UNIT
SA	STACK ARRESTOR
SCSSV	SURFACE CONTROLLED SUBSURFACE SAFETY VALVE
SDD	STACK DOWNDRAFT DIVERTER
SDV	SHUTDOWN VALVE
SP	SPECIALTY ITEM
SSV	SURFACE SAFETY VALVE
SSSV	SUBSURFACE SAFETY VALVE
STR	STRAINER
STV	STEAM TRAP VALVE
SV	SOLENOID VALVE
SY	SOLENOID RELAY
TAH	TEMPERATURE ALARM HIGH
TAHH	TEMPERATURE SHUTDOWN HIGH
TAL	TEMPERATURE ALARM LOW
TALL	TEMPERATURE SHUTDOWN LOW
TC	TEMPERATURE CONTROLLER
TCV	TEMPERATURE CONTROL VALVE
TE	TEMPERATURE ELEMENT
TI	TEMPERATURE INDICATOR
TIC	TEMPERATURE INDICATING CONTROLLER
TIT	TEMPERATURE INDICATING TRANSMITTER
TR	TEMPERATURE RECORDER
TS	TEMPERATURE SWITCH
TSE	FUSIBLE PLUG
TSH	TEMPERATURE SENSOR HIGH
TSL	TEMPERATURE SENSOR LOW
TT	TEMPERATURE TRANSMITTER
TW	THERMOWELL
TY	TEMPERATURE RELAY
UA	UNIT ALARM
VS	VIBRATION SWITCH
XC	FIXED CHOKE
XCV	ADJUSTABLE CHOKE
ZSC	LIMIT SWITCH CLOSE
ZSO	LIMIT SWITCH OPEN

INSTRUMENT BUBBLE

LOCATIONS FOR INSTRUMENT BUBBLE MODIFIERS

- INSTRUMENT TYPE (IDENTIFICATION LETTER)
- LCV 100
- INSTRUMENT NUMBER

- LOCAL MOUNTED INSTRUMENT
- LOCAL PANEL MOUNTED INSTRUMENT
- PANEL MOUNTED CONTROL ROOM
- LOCAL MOUNTED COMBINATION INSTRU.
- LOCAL MOUNTED REAR PANEL
- REAR MOUNTED PANEL CONTROL ROOM
- LIGHT LOCAL MOUNTED
- LIGHT MOUNTED LOCAL PANEL
- LIGHT PANEL MOUNTED CONTROL ROOM
- YC 001 PROGRAMMABLE LOGIC CONTROLLER PLC-NAME
- PCS

MISCELLANEOUS SYMBOLS

- PULSATION DAMPENER
- PSV-000 / ITEM- # / X-000 — PRESSURE SAFETY VALV INSTRUMENTATION & MISC. DETAILS
- ANODE
- ITEM- # / X-000 — DRAINS
- HOSE REEL
- EYE WASH STATION
- EDUCTOR
- WATER TAP

PUMPS

- CENTRIFUGAL PUMP
- INLINE PU
- POSITIVE DISPLACEMENT PUMP
- DIAPHRAGM PUMP

PANEL LEGEND

- ESD — ESD PANEL
- UCP — UNIT CONTROL PANEL
- MCC — MOTOR CONTROL CENTER
- MCP — METERING CONTROL PANEL
- SCP — STATION CONTROL PANEL
- DCP — DEHY CONTROL PANEL

REFERENCE DRAWINGS	DRAWING No.

NOTES:

REV		DRAWN	CHK	END	DATE
A01	APPROVED FOR DESIGN	FA	OJ	AD	12.12..2022
R02	ISSUED FOR REVIEW	FA	OJ	AD	21.10.2022
R01	ISSUED FOR REVIEW	FA	OJ	AD	08.09.2022
R00	ISSUE FOR IDC	FA	OJ	AD	05.09.2022

COPY RIGHT RESERVED

CONTRACTOR: epic ATLANTIC

ENDORSEMENT

RELEASED FOR	DESIGN ENGR.	BFPC TECH REP	SPDC TECH REP	DATE
REVIEW	KY	–	–	–

BRASS FERTILIZER & PETROCHEMICAL COMPANY LIMITED

brass fertilizer

GAS PROCESSING AND METHANOL COMPLEX PROJECT
FEED FOR GAS GATHERING PIPELINES

PROCESS SYSTEMS ENGINEERING
PROCESS ENGINEERING FLOW SHEETS (PEFS)
LEGENDS

DRAWN: RO	DATE: 21.OCT.2022	SHEET: 1 OF 13	
CHECKED: KY	DRAWING No. EA-BFPCL-GPMC-GGPL-FEED-PSE-DWG-003_00	REV.	
ENDORSED: AD	PROJECT No. 11998A	A01	
APP'D DATE: 12.DEC.2022	PROJECT No.		

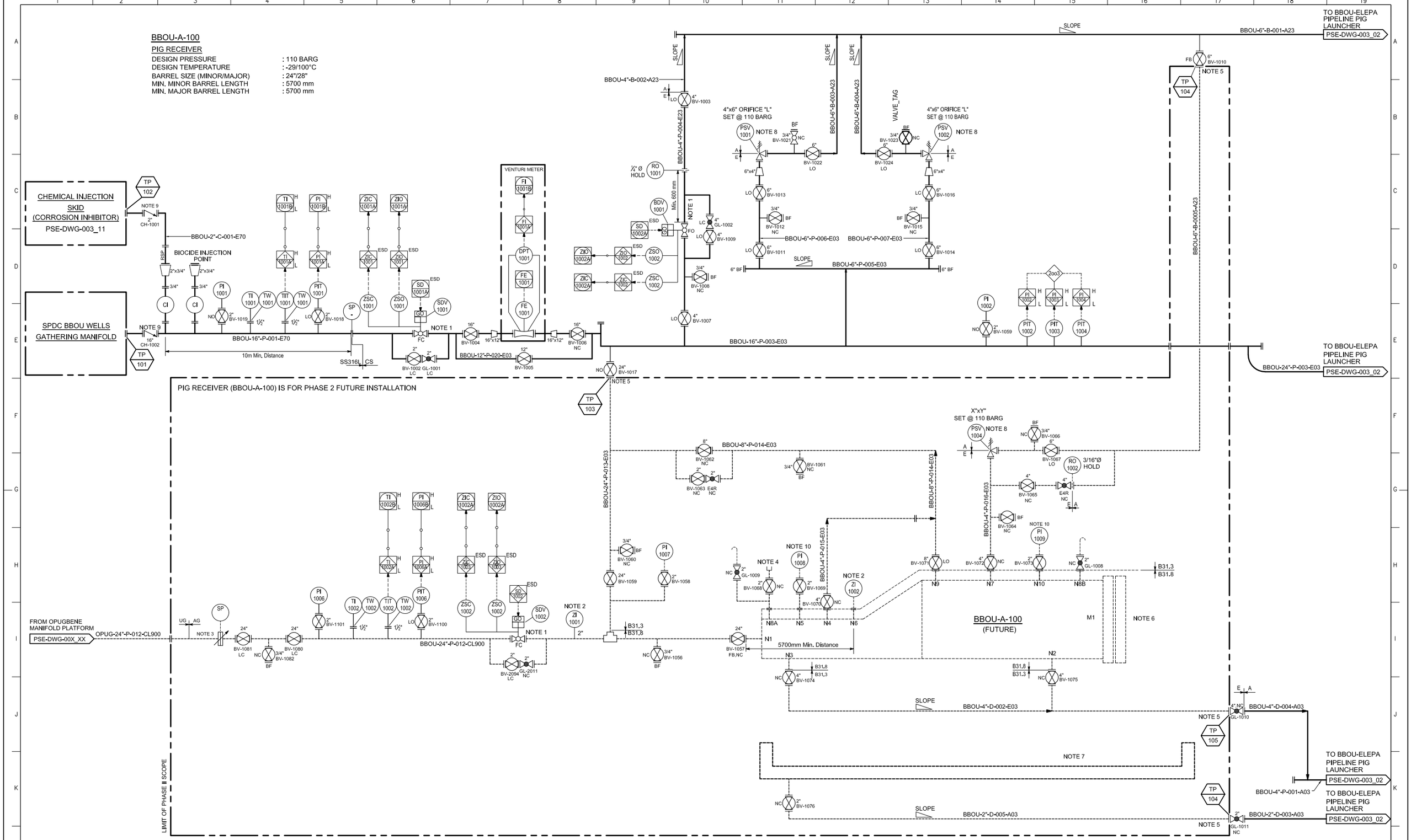

REFERENCE DRAWINGS	DRAWING No.

NOTES:

1. REMOTE OPERATED VALVE TO BE EQUIPPED WITH GAS OVER OIL ACTUATOR AND DUAL SOLENOID TYPE.
2. NON-INTRUSIVE PIG DETECTOR TYPE.
3. MONOLITHIC ISOLATION JOINT.
4. QUICK COUPLING FOR PURGE CONNECTION .
5. TIE-IN IS PROVIDED FOR PHASE II INSTALLATION OF PIG RECEIVER AND ASSOCIATED PIPING SYSTEM. DURING PHASE I INSTALLATION, THE VALVE (MONOBLOCK DOUBLE BLOCK AND BLEED) SHALL BE BLIND FLANGED AND IN LOCK CLOSED POSITION.
6. PIG LAUNCHER CLOSURE SHALL BE EQUIPPED WITH SAFETY FEATURES TO PREVENT INADVERTENT OPENING OF THE CLOSURE DOOR DURING OPERATION.
7. DRAIN PAN TO BE SKIDDED WITH THE PIG TRAP SYSTEM.
8. PSV FOR THEMAL / FIRE EXPANSION CASE.
9. ALL CHECK VALVES TO BE CLASS 1.
10. PRESSURE GUAGE TO BE IN THE RANGE OF 0 - 1 barg.

REV		DRAWN	CHK	END	DATE
A01	APPROVED FOR DESIGN	FA	OJ	AD	12.12.2022
R04	ISSUED FOR REVIEW	FA	OJ	AD	21.10.2022
R03	ISSUED FOR REVIEW	FA	OJ	AD	08.09.2022
R02	ISSUED FOR REVIEW	RO	KY	AD	06.06.2022
R01	ISSUED FOR REVIEW	BA	KY	AD	17.05.2022
R00	ISSUE FOR IDC	RO	KY	AD	25.04.2022

COPY RIGHT RESERVED

CONTRACTOR: epic ATLANTIC

ENDORSEMENT				
RELEASED FOR	DESIGN ENGR.	BFPC TECH REP	SPDC TECH REP	DATE
REVIEW	KY	–	–	–

BRASS FERTILIZER & PETROCHEMICAL COMPANY LIMITED

brass fertilizer

GAS PROCESSING AND METHANOL COMPLEX PROJECT
FEED FOR GAS GATHERING PIPELINES

PROCESS SYSTEMS ENGINEERING
PROCESS ENGINEERING FLOW SHEETS (PEFS)
BBOU MANIFOLD PLATFORM

DRAWN: RO	DATE: 21.OCT.2022	SHEET: 1 OF 13	
CHECKED: KY	DRAWING No. EA-BFPCL-GPMC-GGPL-FEED-PSE-DWG-003_1	REV.	
ENDORSED: AD	PROJECT No. 11998A	A01	
APP'D DATE: 12.DEC.2022	PROJECT No.		

BBOU-A-200

PIG LAUNCHER

DESIGN PRESSURE	: 110 BARG
DESIGN TEMPERATURE	: -29/100°C
BARREL SIZE (MINOR/MAJOR)	: 24"/28"
MIN. MINOR BARREL LENGTH	: 1500 mm
MIN. MAJOR BARREL LENGTH	: 5700 mm

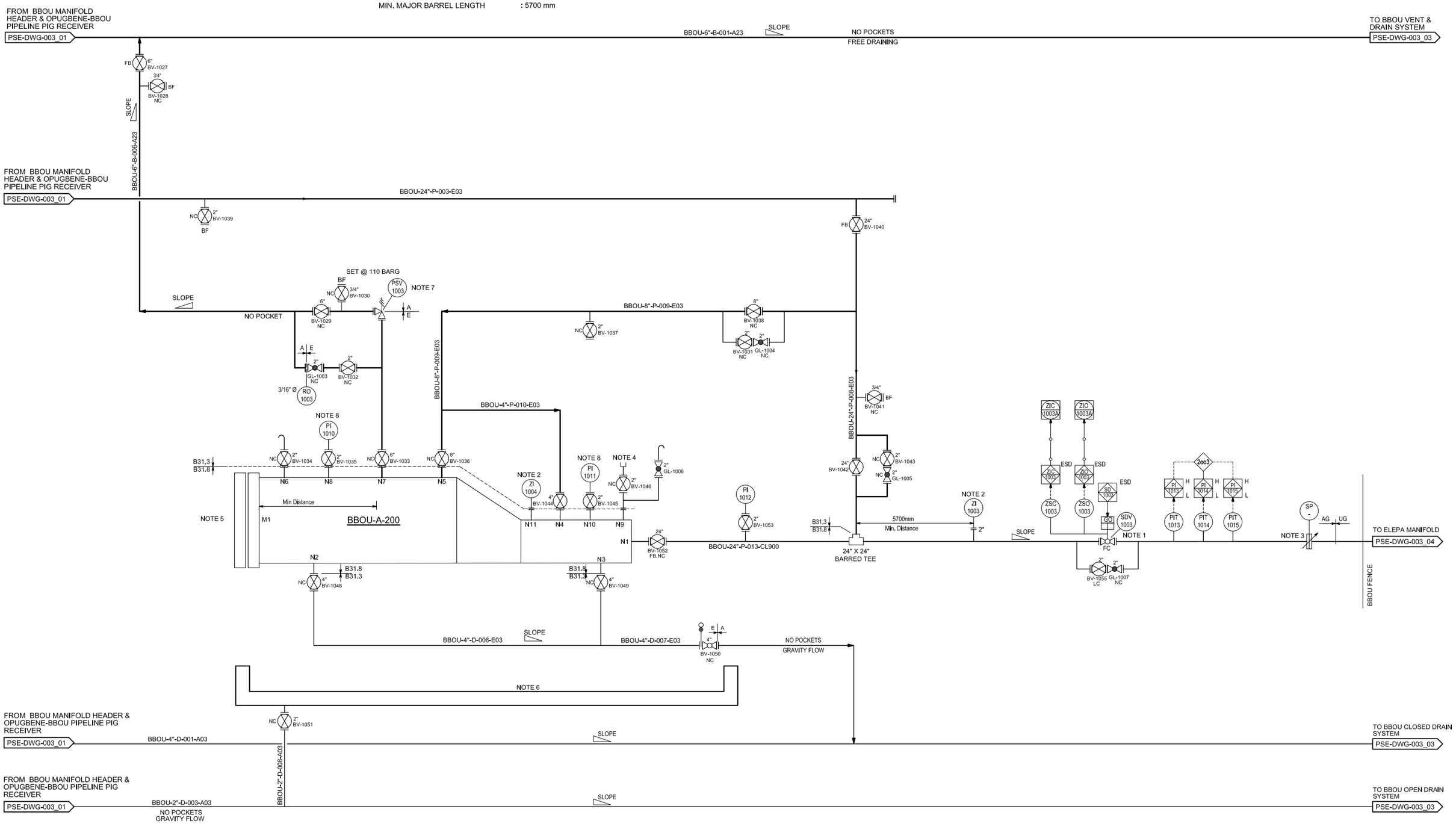

REFERENCE DRAWINGS	DRAWING No.

NOTES:

1. REMOTE OPERATED VALVE TO BE EQUIPPED WITH GAS OVER OIL ACTUATOR AND DUAL SOLENOID TYPE.
2. NON-INTRUSIVE PIG DETECTOR TYPE.
3. MONOLITHIC ISOLATION JOINT.
4. QUICK COUPLING FOR PURGE CONNECTION .
5. PIG LAUNCHER CLOSURE SHALL BE EQUIPPED WITH SAFETY FEATURES TO PREVENT INADVERTENT OPENING OF THE CLOSURE DOOR DURING OPERATION.
6. DRAIN PAN TO BE SKIDDED WITH THE PIG TRAP SYSTEM.
7. PSV FOR THEMAL / FIRE EXPANSION CASE.
8. PRESSURE GUAGE TO BE IN THE RANGE OF 0 - 1 barg.

REV		DRAWN	CHK	END	DATE
A01	APPROVED FOR DESIGN	FA	OJ	AD	12.12.2022
R04	ISSUED FOR REVIEW	FA	OJ	AD	21.10.2022
R03	ISSUED FOR REVIEW	FA	OJ	AD	08.09.2022
R02	ISSUED FOR REVIEW	RO	KY	AD	06.06.2022
R01	ISSUED FOR REVIEW	BA	KY	AD	17.05.2022
R00	ISSUE FOR IDC	RO	KY	AD	25.04.2022

COPY RIGHT RESERVED

CONTRACTOR: epic ATLANTIC

ENDORSEMENT

RELEASED FOR	DESIGN ENGR.	BFPC TECH REP	SPDC TECH REP	DATE
REVIEW	KY	–	–	–

BRASS FERTILIZER & PETROCHEMICAL COMPANY LIMITED

brass fertilizer

GAS PROCESSING AND METHANOL COMPLEX PROJECT
FEED FOR GAS GATHERING PIPELINES

PROCESS SYSTEMS ENGINEERING
PROCESS ENGINEERING FLOW SHEETS (PEFS)
BBOU MANIFOLD PLATFORM (BBOU–ELEP PIPELINE PIG LAUNCHER)

DRAWN: RO	DATE: 21.OCT.2022	SHEET: 3 OF 13	
CHECKED: KY	DRAWING No. EA-BFPCL-GPMC-GGPL-FEED-PSE-DWG-003_2	REV.	
ENDORSED: AD	PROJECT No. 11998A	A01	
APP'D DATE: 12.DEC.2022	PROJECT No.		

BBOU-CDT-001

SIZE : Ø 1000mm x 3000mm T/T
DESIGN PRESSURE 7 BARG
DESIGN TEMPERATURE -29 / 50°C
OPERATING CONDITION ATM / AMB

BBOU-ODT-001

SIZE (L x W x D) : 2000mm x 1000mm x 1000mm
DESIGN PRESSURE : ATM
DESIGN TEMPERATURE : AMBIENT

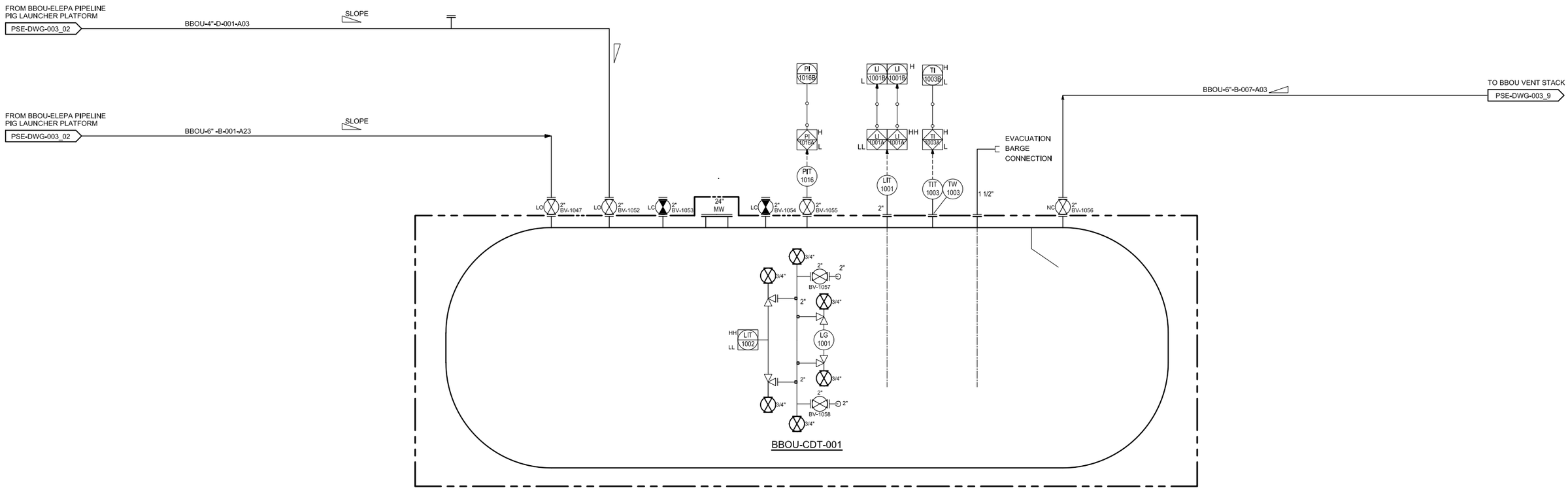

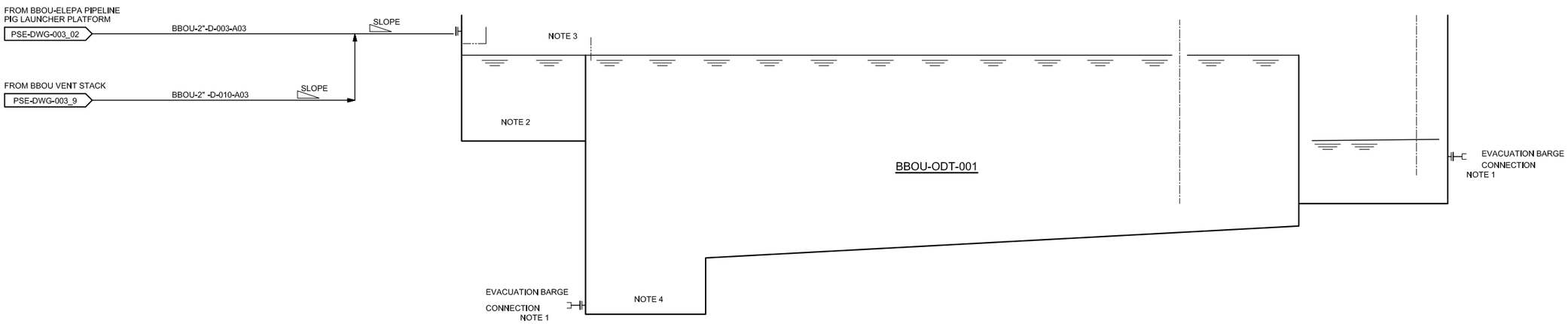

REFERENCE DRAWINGS	DRAWING No.

NOTES:
1. CONNECTION FOR EVACUATION THROUGH BARGE.
2. SLUDGE AND COARSE OIL SEPARATION COMPARTMENT.
3. ADJUSTABLE WEIR TO CONTROL FLOATING OIL LEVEL.
4. SLUDGE COLLECTION SUMP.
5. ENTIRE PIT TO BE COVERED AGAINST INGRESS OF RAINWATER AND DEBRIS.

REV		DRAWN	CHK	END	DATE
A01	APPROVED FOR DESIGN	FA	OJ	AD	12.12.2022
R04	ISSUED FOR REVIEW	FA	OJ	AD	21.10.2022
R03	ISSUED FOR REVIEW	FA	OJ	AD	08.09.2022
R02	ISSUED FOR REVIEW	RO	KY	AD	06.06.2022
R01	ISSUED FOR REVIEW	BA	KY	AD	17.05.2022
R00	ISSUE FOR IDC	RO	KY	AD	25.04.2022

COPY RIGHT RESERVED

CONTRACTOR: epic ATLANTIC

ENDORSEMENT

RELEASED FOR	DESIGN ENGR.	BFPC TECH REP	SPDC TECH REP	DATE
REVIEW	KY	–	–	–

BRASS FERTILIZER & PETROCHEMICAL COMPANY LIMITED

brass fertilizer

GAS PROCESSING AND METHANOL COMPLEX PROJECT
FEED FOR GAS GATHERING PIPELINES

PROCESS SYSTEMS ENGINEERING
PROCESS ENGINEERING FLOW SHEETS (PEFS)
BBOU MANIFOLD PLATFORM VENT AND DRAIN SYSTEM

DRAWN: RO	DATE: 21.OCT.2022	SHEET: 4 OF 13	
CHECKED: KY	DRAWING No. EA-BFPCL-GPMC-GGPL-FEED-PSE-DWG-003_3	REV.	
ENDORSED: AD	PROJECT No. 11998A	A01	
APP'D DATE: 12.DEC.2022	PROJECT No.		

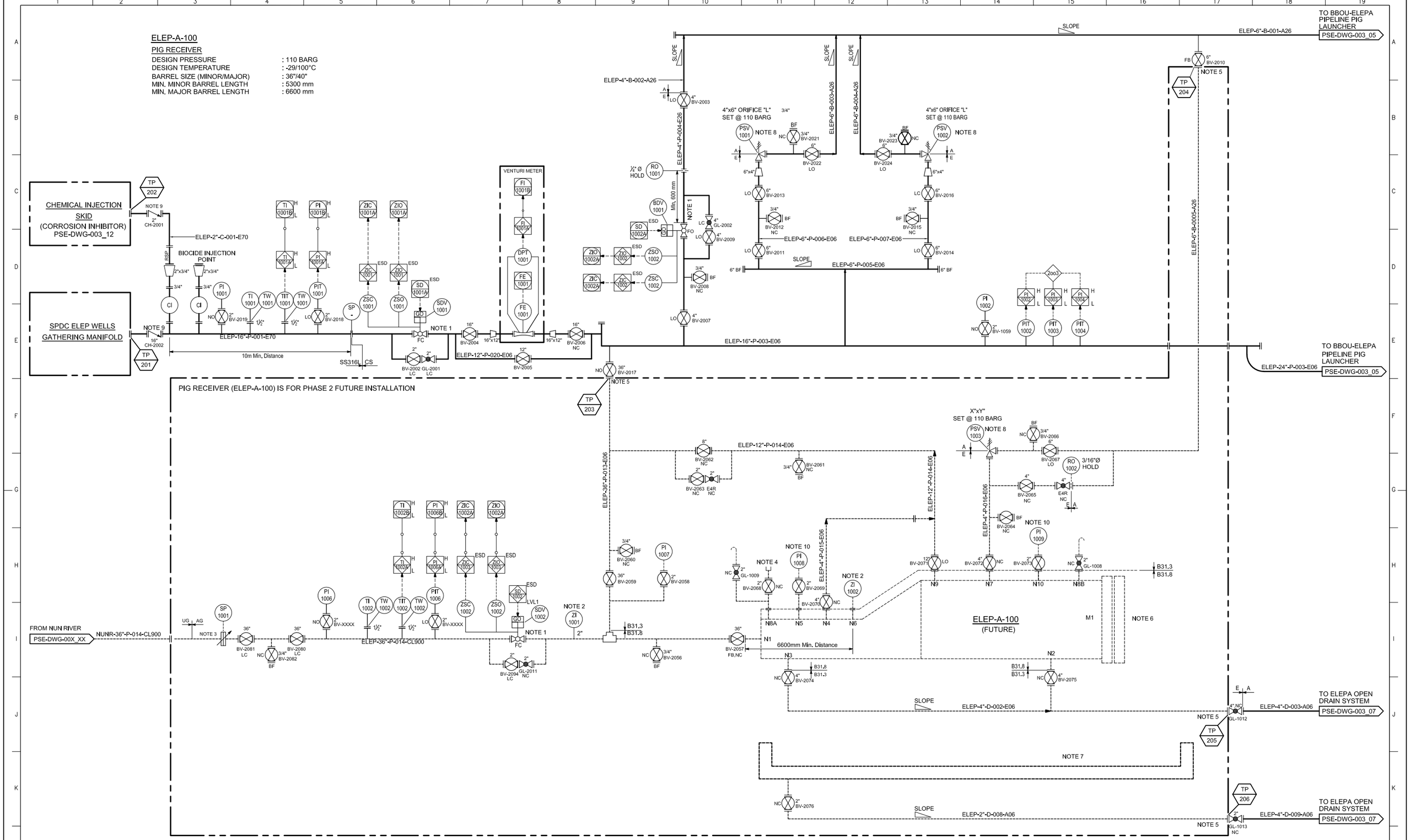

REFERENCE DRAWINGS	DRAWING No.

NOTES:

1. REMOTE OPERATED VALVE TO BE EQUIPPED WITH GAS OVER OIL ACTUATOR AND DUAL SOLENOID TYPE.
2. NON-INTRUSIVE PIG DETECTOR TYPE.
3. MONOLITHIC ISOLATION JOINT.
4. QUICK COUPLING FOR PURGE CONNECTION .
5. TIE-IN IS PROVIDED FOR PHASE II INSTALLATION OF PIG RECEIVER AND ASSOCIATED PIPING SYSTEM. DURING PHASE I INSTALLATION, THE VALVE (MONOBLOCK DOUBLE BLOCK AND BLEED) SHALL BE BLIND FLANGED AND IN LOCK CLOSED POSITION.
6. PIG LAUNCHER CLOSURE SHALL BE EQUIPPED WITH SAFETY FEATURES TO PREVENT INADVERTENT OPENING OF THE CLOSURE DOOR DURING OPERATION.
7. DRAIN PAN TO BE SKIDDED WITH THE PIG TRAP SYSTEM.
8. PSV FOR THEMAL / FIRE EXPANSION CASE.
9. ALL CHECK VALVES TO BE CLASS 1.
10. PRESSURE GUAGE TO BE IN THE RANGE OF 0 - 1 barg.

REV		DRAWN	CHK	END	DATE
A01	APPROVED FOR DESIGN	FA	OJ	AD	12.12.2022
R04	ISSUED FOR REVIEW	FA	OJ	AD	21.10.2022
R03	ISSUED FOR REVIEW	FA	OJ	AD	08.09.2022
R02	ISSUED FOR REVIEW	RO	KY	AD	06.06.2022
R01	ISSUED FOR REVIEW	BA	KY	AD	17.05.2022
R00	ISSUE FOR IDC	RO	KY	AD	25.04.2022

COPY RIGHT RESERVED

CONTRACTOR: epic ATLANTIC

ENDORSEMENT				
RELEASED FOR	DESIGN ENGR.	BFPC TECH REP	SPDC TECH REP	DATE
REVIEW	KY	–	–	–

BRASS FERTILIZER & PETROCHEMICAL COMPANY LIMITED

brass fertilizer

GAS PROCESSING AND METHANOL COMPLEX PROJECT
FEED FOR GAS GATHERING PIPELINES

PROCESS SYSTEMS ENGINEERING
PROCESS ENGINEERING FLOW SHEETS (PEFS)
ELEPA MANIFOLD PLATFORM

DRAWN: RO	DATE: 21.OCT.2022	SHEET: 5 OF 13	
CHECKED: KY	DRAWING No. EA-BFPCL-GPMC-GGPL-FEED-PSE-DWG-003_4	REV.	
ENDORSED: AD	PROJECT No. 11998A	A01	
APP'D DATE: 12.DEC.2022	PROJECT No.		

ELEP-A-200

PIG RECEIVER

DESIGN PRESSURE	: 110 BARG
DESIGN TEMPERATURE	: -29/100°C
BARREL SIZE (MINOR/MAJOR)	: 24"/28"
MIN. MINOR BARREL LENGTH	: 5700 mm
MIN. MAJOR BARREL LENGTH	: 5700 mm

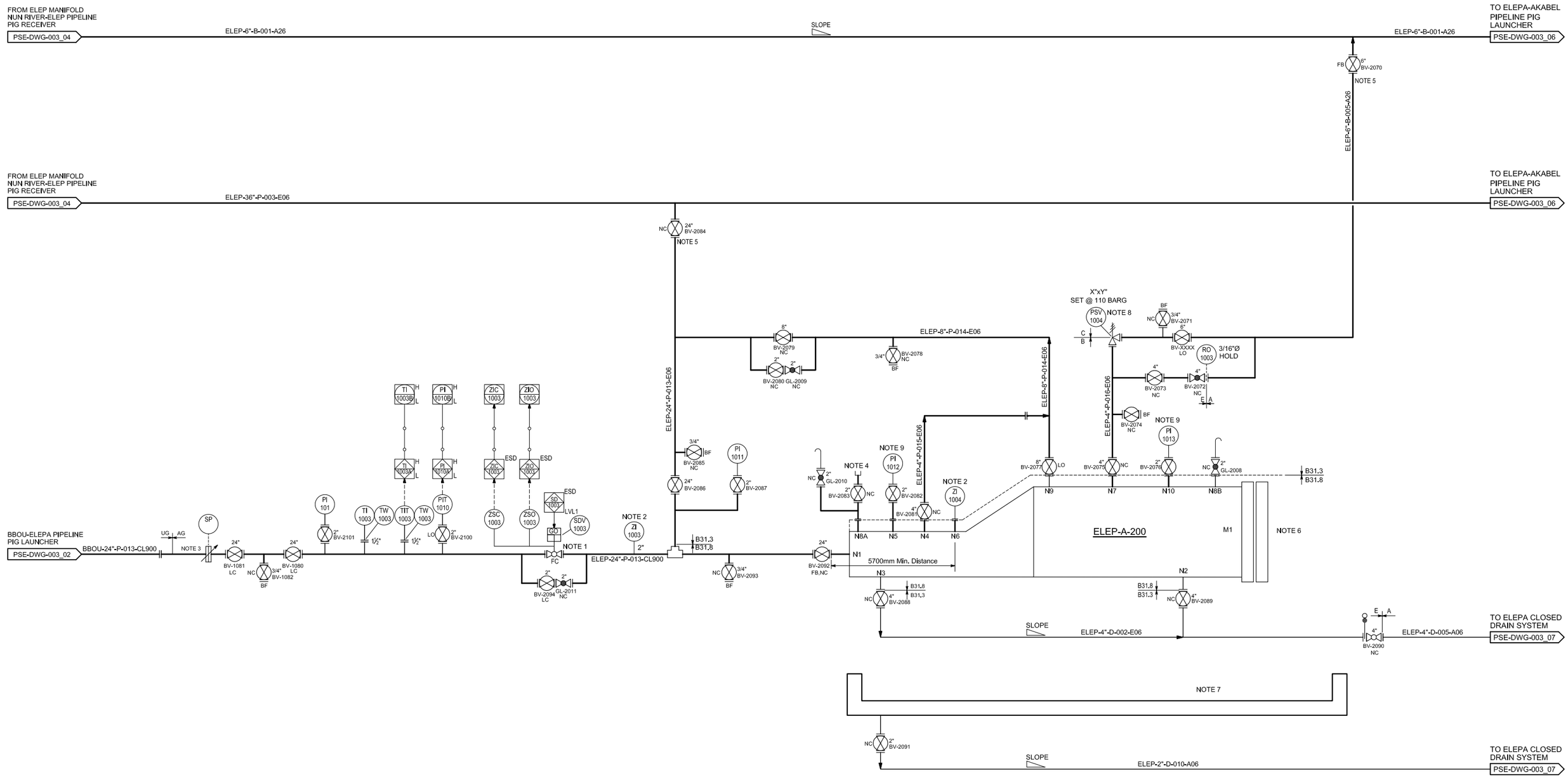

REFERENCE DRAWINGS	DRAWING No.

NOTES:

1. REMOTE OPERATED VALVE TO BE EQUIPPED WITH GAS OVER OIL ACTUATOR AND DUAL SOLENOID TYPE.
2. NON-INTRUSIVE PIG DETECTOR TYPE.
3. MONOLITHIC ISOLATION JOINT.
4. QUICK COUPLING FOR PURGE CONNECTION .
5. TIE-IN IS PROVIDED FOR PHASE II INSTALLATION OF PIG RECEIVER AND ASSOCIATED PIPING SYSTEM. DURING PHASE I INSTALLATION, THE VALVE (MONOBLOCK DOUBLE BLOCK AND BLEED) SHALL BE BLIND FLANGED AND IN LOCK CLOSED POSITION.
6. PIG LAUNCHER CLOSURE SHALL BE EQUIPPED WITH SAFETY FEATURES TO PREVENT INADVERTENT OPENING OF THE CLOSURE DOOR DURING OPERATION.
7. DRAIN PAN TO BE SKIDDED WITH THE PIG TRAP SYSTEM.
8. PSV FOR THEMAL / FIRE EXPANSION CASE.
9. PRESSURE GUAGE TO BE IN THE RANGE OF 0 - 1 barg.

REV		DRAWN	CHK	END	DATE
A01	APPROVED FOR DESIGN	FA	OJ	AD	12.12.2022
R04	ISSUED FOR REVIEW	FA	OJ	AD	21.10.2022
R03	ISSUED FOR REVIEW	FA	OJ	AD	08.09.2022
R02	ISSUED FOR REVIEW	RO	KY	AD	06.06.2022
R01	ISSUED FOR REVIEW	BA	KY	AD	17.05.2022
R00	ISSUE FOR IDC	RO	KY	AD	25.04.2022

COPY RIGHT RESERVED

CONTRACTOR

epic ATLANTIC

ENDORSEMENT

RELEASED FOR	DESIGN ENGR.	BFPC TECH REP	SPDC TECH REP	DATE
REVIEW	KY	–	–	–

BRASS FERTILIZER & PETROCHEMICAL COMPANY LIMITED

brass fertilizer

GAS PROCESSING AND METHANOL COMPLEX PROJECT
FEED FOR GAS GATHERING PIPELINES

PROCESS SYSTEMS ENGINEERING
PROCESS ENGINEERING FLOW SHEETS (PEFS)
ELEPA MANIFOLD PLATFORM (BBOU–ELEP PIPELINE PIG RECEIVER)

DRAWN: RO	DATE: 21.OCT.2022	SHEET: 6 OF 13	
CHECKED: KY	DRAWING No. EA–BFPCL–GPMC–GGPL–FEED–PSE–DWG–003_5	REV.	
ENDORSED: AD	PROJECT No. 11998A	A01	
APP'D DATE: 12.DEC.2022	PROJECT No.		

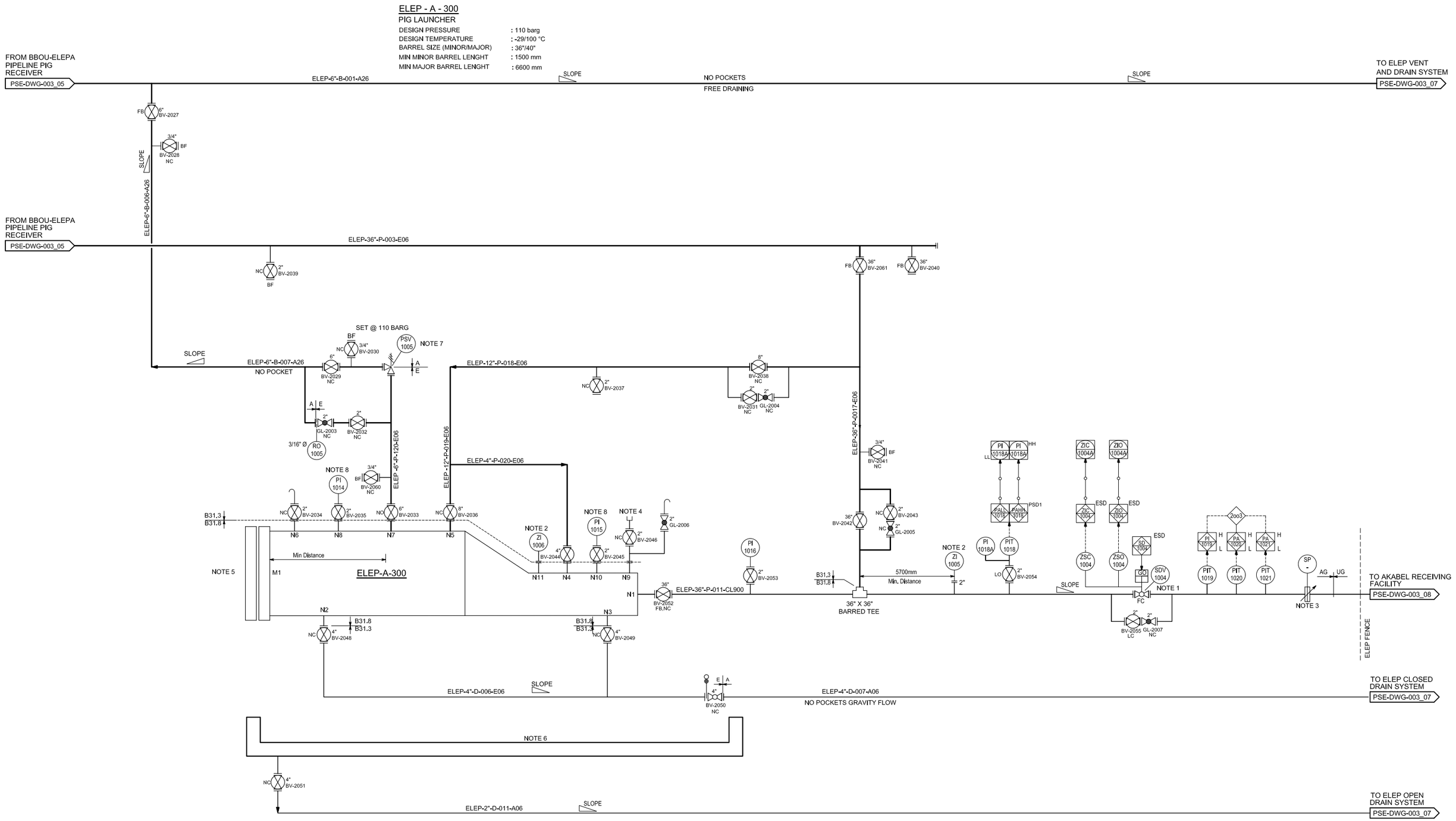

REFERENCE DRAWINGS	DRAWING No.

NOTES:

1. REMOTE OPERATED VALVE TO BE EQUIPPED WITH GAS OVER OIL ACTUATOR AND DUAL SOLENOID TYPE.
2. NON-INTRUSIVE PIG DETECTOR TYPE.
3. MONOLITHIC ISOLATION JOINT.
4. QUICK COUPLING FOR PURGE CONNECTION .
5. PIG LAUNCHER CLOSURE SHALL BE EQUIPPED WITH SAFETY FEATURES TO PREVENT INADVERTENT OPENING OF THE CLOSURE DOOR DURING OPERATION.
6. DRAIN PAN TO BE SKIDDED WITH THE PIG TRAP SYSTEM.
7. PSV FOR THEMAL / FIRE EXPANSION CASE.
8. PRESSURE GUAGE TO BE IN THE RANGE OF 0 - 1 barg.

REV		DRAWN	CHK	END	DATE
A01	APPROVED FOR DESIGN	FA	OJ	AD	12.12.2022
R04	ISSUED FOR REVIEW	FA	OJ	AD	21.10.2022
R03	ISSUED FOR REVIEW	FA	OJ	AD	08.09.2022
R02	ISSUED FOR REVIEW	RO	KY	AD	06.06.2022
R01	ISSUED FOR REVIEW	BA	KY	AD	17.05.2022
R00	ISSUE FOR IDC	RO	KY	AD	25.04.2022

COPY RIGHT RESERVED

CONTRACTOR: epic ATLANTIC

ENDORSEMENT

RELEASED FOR	DESIGN ENGR.	BFPC TECH REP	SPDC TECH REP	DATE
REVIEW	KY	–	–	–

BRASS FERTILIZER & PETROCHEMICAL COMPANY LIMITED

brass fertilizer

GAS PROCESSING AND METHANOL COMPLEX PROJECT
FEED FOR GAS GATHERING PIPELINES

PROCESS SYSTEMS ENGINEERING
PROCESS ENGINEERING FLOW SHEETS (PEFS)
ELEPA MANIFOLD PLATFORM (ELEPA-AKABEL PIPELINE PIG LAUCHER)

DRAWN: RO	DATE: 21.OCT.2022	SHEET: 7 OF 13	
CHECKED: KY	DRAWING No. EA-BFPCL-GPMC-GGPL-FEED-PSE-DWG-003_6	REV.	
ENDORSED: AD	PROJECT No. 11998A	A01	
APP'D DATE: 12.DEC.2022	PROJECT No.		

ELEP-CDT-001

SIZE : Ø 1000mm x 3000mm T/T
DESIGN PRESSURE : 7 BARG
DESIGN TEMPERATURE : -29 / 50°C
OPERATING CONDITION : ATM / AMB

ELEP-ODT-001

SIZE (L x W x D) : 2000mm x 1000mm X 1000mm
DESIGN PRESSURE : ATM
DESIGN TEMPERATURE :AMBIENT

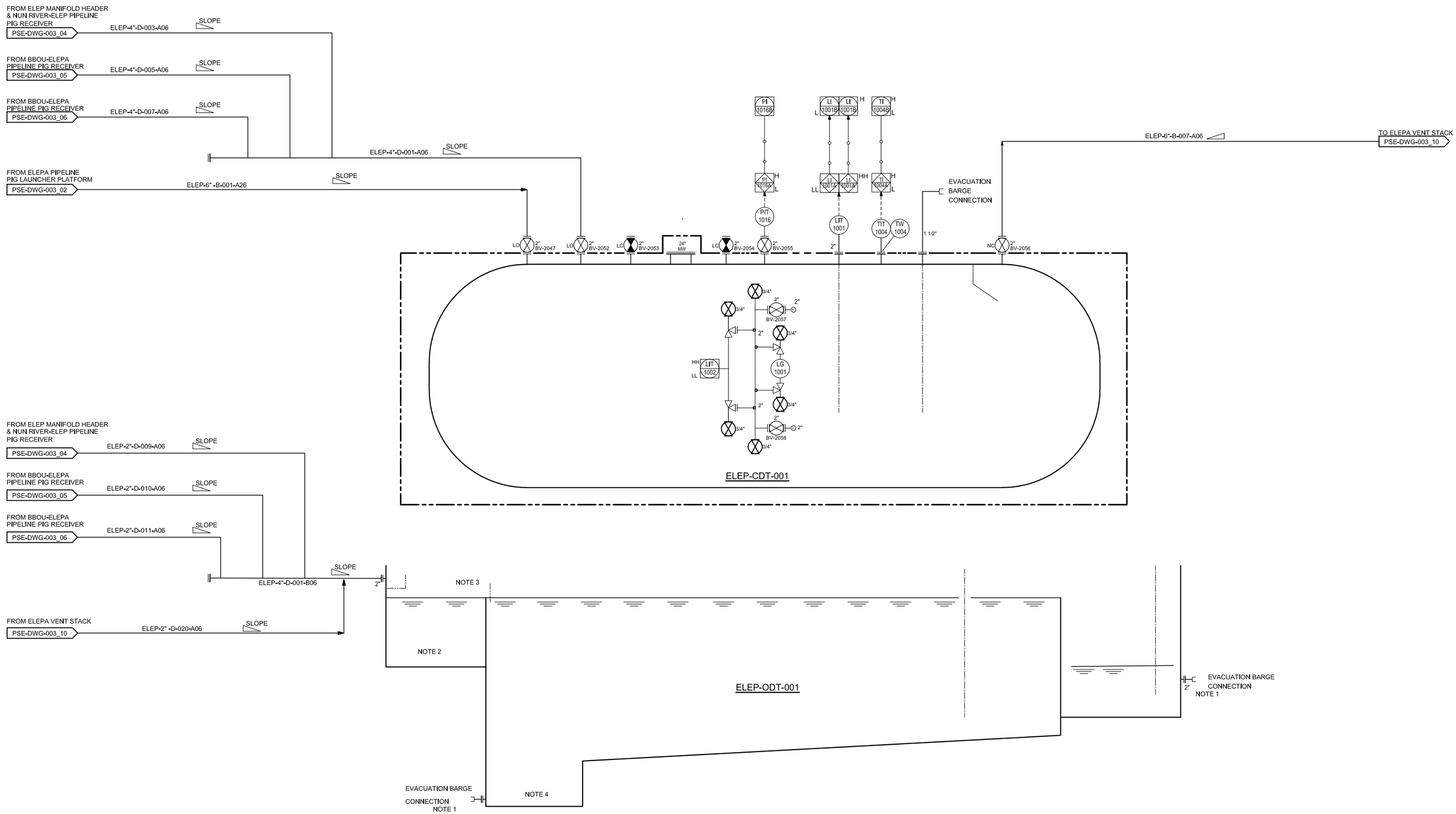

REFERENCE DRAWINGS	DRAWING No.

NOTES:

1. CONNECTION FOR EVACUATION THROUGH BARGE.
2. SLUDGE AND COARSE OIL SEPARATION COMPARTMENT.
3. ADJUSTABLE WEIR TO CONTROL FLOATING OIL LEVEL.
4. SLUDGE COLLECTION SUMP.
5. ENTIRE PIT TO BE COVERED AGAINST INGRESS OF RAINWATER AND DEBRIS.
6. FLAME ARRESTOR TO BE INSTALLED.

REV		DRAWN	CHK	END	DATE
A01	APPROVED FOR DESIGN	FA	OJ	AD	12.12.2022
R04	ISSUED FOR REVIEW	FA	OJ	AD	21.10.2022
R03	ISSUED FOR REVIEW	FA	OJ	AD	08.09.2022
R02	ISSUED FOR REVIEW	RO	KY	AD	06.06.2022
R01	ISSUED FOR REVIEW	BA	KY	AD	17.05.2022
R00	ISSUE FOR IDC	RO	KY	AD	25.04.2022

COPY RIGHT RESERVED

CONTRACTOR: epic ATLANTIC

ENDORSEMENT

RELEASED FOR	DESIGN ENGR.	BFPC TECH REP	SPDC TECH REP	DATE
REVIEW	KY	–	–	–

BRASS FERTILIZER & PETROCHEMICAL COMPANY LIMITED

brass fertilizer

GAS PROCESSING AND METHANOL COMPLEX PROJECT
FEED FOR GAS GATHERING PIPELINES

PROCESS SYSTEMS ENGINEERING
PROCESS ENGINEERING FLOW SHEETS (PEFS)
ELEPA MANIFOLD PLATFORM VENT AND DRAIN SYSTEM

DRAWN: RO	DATE: 21.OCT.2022	SHEET: 8 OF 13	
CHECKED: KY	DRAWING No. EA-BFPCL-GPMC-GGPL-FEED-PSE-DWG-003_7	REV.	
ENDORSED: AD	PROJECT No. 11998A	A01	
APP'D DATE: 12.DEC.2022	PROJECT No.		

AKAB-A-100

PIG RECEIVER

DESIGN PRESSURE	: 110 BARG
DESIGN TEMPERATURE	: -29/100°C
BARREL SIZE (MINOR/MAJOR)	: 36"/40"
MIN. MINOR BARREL LENGTH	: 5300 mm
MIN. MAJOR BARREL LENGTH	: 6600 mm

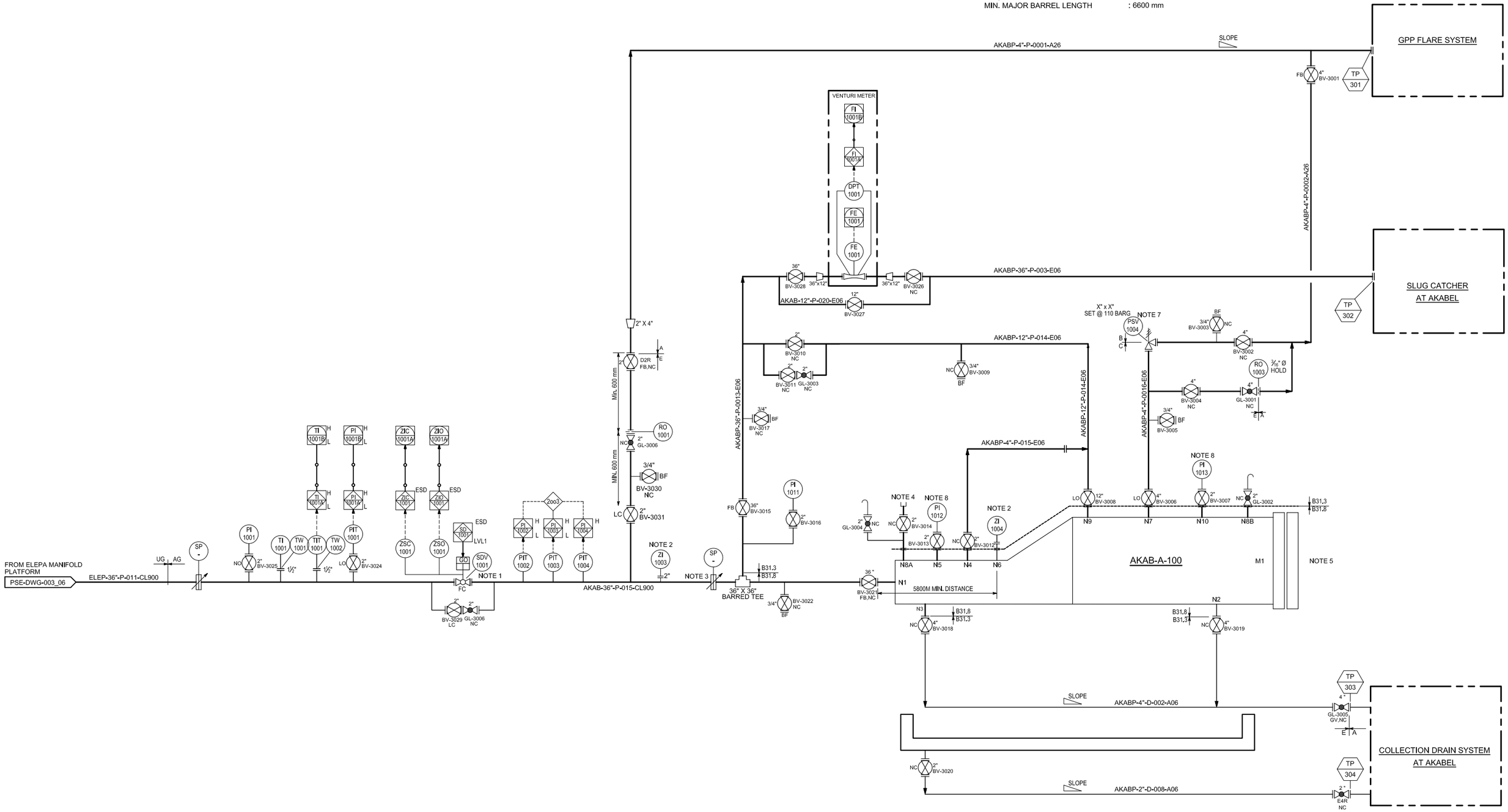

REFERENCE DRAWINGS	DRAWING No.

NOTES:

1. REMOTE OPERATED VALVE TO BE EQUIPPED WITH GAS OVER OIL ACTUATOR.
2. NON-INTRUSIVE PIG DETECTOR TYPE.
3. MONOLITHIC ISOLATION JOINT.
4. QUICK COUPLING FOR PURGE CONNECTION.
5. PIG LAUNCHER CLOSURE SHALL BE EQUIPPED WITH SAFETY FEATURES TO PREVENT INADVERTENT OPENING OF THE CLOSURE DOOR DURING OPERATION.
6. DRAIN PAN TO BE SKIDDED WITH THE PIG TRAP SYSTEM.
7. PSV FOR THEMAL / FIRE EXPANSION CASE.
8. PRESSURE GAUGE TO BE IN THE RANGE OF 0 - 1 barg

REV		DRAWN	CHK	END	DATE
A01	APPROVED FOR DESIGN	FA	OJ	AD	12.12.2022
R04	ISSUED FOR REVIEW	FA	OJ	AD	21.10.2022
R03	ISSUED FOR REVIEW	FA	OJ	AD	08.09.2022
R02	ISSUED FOR REVIEW	RO	KY	AD	06.06.2022
R01	ISSUED FOR REVIEW	BA	KY	AD	17.05.2022
R00	ISSUE FOR IDC	RO	KY	AD	25.04.2022

COPY RIGHT RESERVED

CONTRACTOR: epic ATLANTIC

ENDORSEMENT

RELEASED FOR	DESIGN ENGR.	BFPC TECH REP	SPDC TECH REP	DATE
REVIEW	KY	–	–	–

BRASS FERTILIZER & PETROCHEMICAL COMPANY LIMITED

brass fertilizer

GAS PROCESSING AND METHANOL COMPLEX PROJECT
FEED FOR GAS GATHERING PIPELINES

PROCESS SYSTEMS ENGINEERING
PROCESS ENGINEERING FLOW SHEETS (PEFS)
AKABEL PIPELINE END FACILITIES

DRAWN: RO	DATE: 21.OCT.2022	SHEET: 9 OF 13	
CHECKED: KY	DRAWING No. EA-BFPCL-GPMC-GGPL-FEED-PSE-DWG-003_8	REV.	
ENDORSED: AD	PROJECT No. 11998A	A01	
APP'D DATE: 12.DEC.2022	PROJECT No.		

BBOU-A-200
VENT STACK

SIZE (mm)DIA x (mm) T/T)	: 100/600 x 2200 (HOLD 1)
DESIGN PRESSURE (barg)	: 7
DESIGN TEMPERATURE MIN/MAX (°C)	: -50/80
OPERATING CONDITION (barg/°C)	: ATM/30
RATED CAPACTIY (mmscfd)	: 1

BBOU-FLAME-001
FLAME ARRESTOR

SIZE (mm)DIA x (mm) T/T)	: DN100 x XXXX (HOLD 1)
DESIGN PRESSURE (barg)	: 7
DESIGN TEMPERATURE MIN/MAX (°C)	: -50/80
OPERATING CONDITION (barg/°C)	: ATM/30
RATED CAPACTIY (mmscfd)	: 1

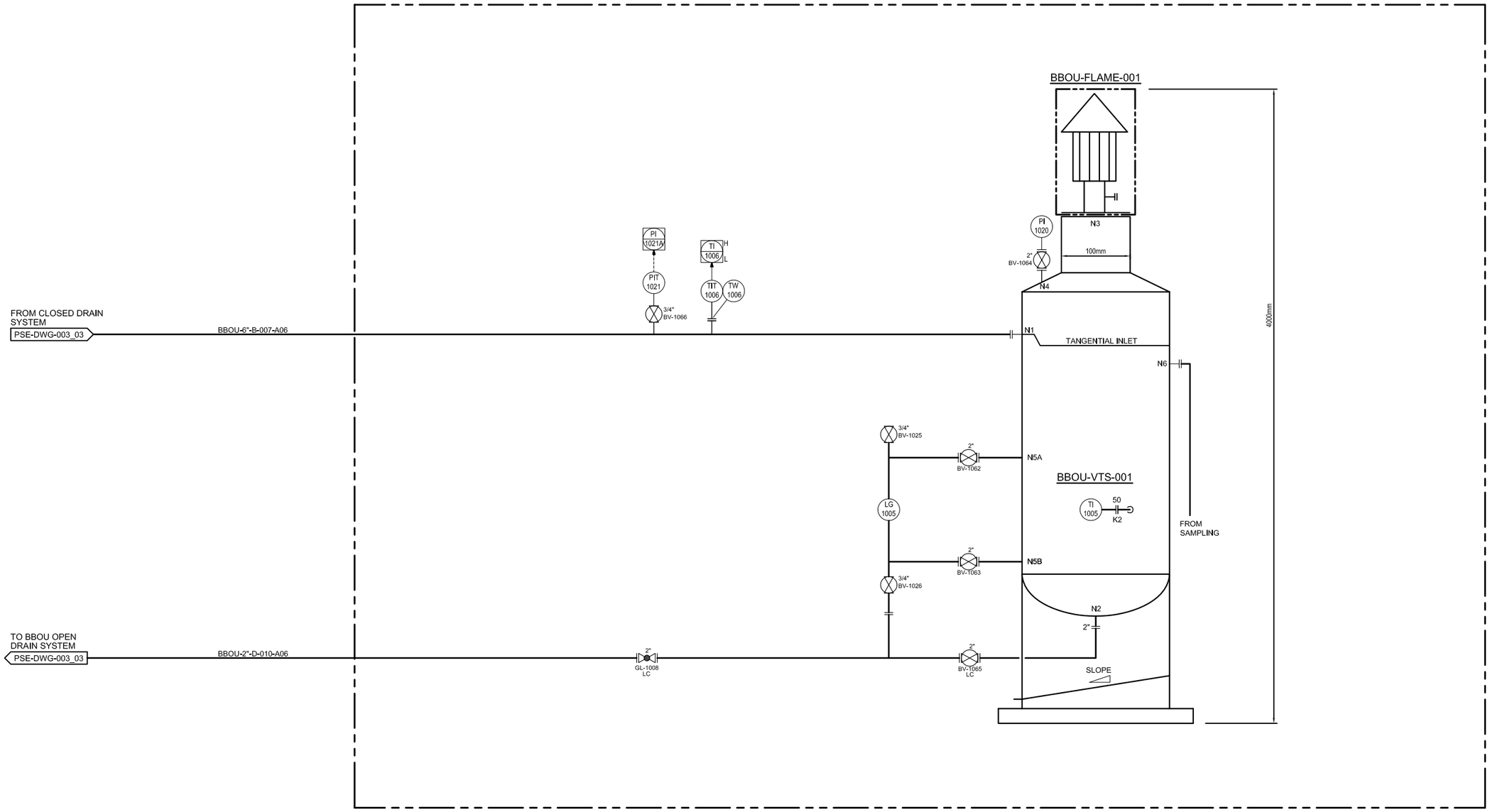

REFERENCE DRAWINGS	DRAWING No.

NOTES:

HOLD:
1: VENDOR TO CONFIRM SIZE DURING DED

REV		DRAWN	CHK	END	DATE
A01	APPROVED FOR DESIGN	FA	OJ	AD	12.12.2022
R02	ISSUED FOR REVIEW	FA	OJ	AD	21.10.2022
R01	ISSUED FOR REVIEW	FA	OJ	AD	08.09.2022
R00	ISSUE FOR IDC	FA	OJ	AD	05.09.2022

COPY RIGHT RESERVED

CONTRACTOR: epic ATLANTIC

ENDORSEMENT

RELEASED FOR	DESIGN ENGR.	BFPC TECH REP	SPDC TECH REP	DATE
REVIEW	KY	–	–	–

BRASS FERTILIZER & PETROCHEMICAL COMPANY LIMITED

brass fertilizer

GAS PROCESSING AND METHANOL COMPLEX PROJECT
FEED FOR GAS GATHERING PIPELINES

PROCESS SYSTEMS ENGINEERING
PROCESS ENGINEERING FLOW SHEETS (PEFS)
BBOU VENT

DRAWN: RO	DATE: 21.OCT.2022	SHEET:10 OF 13	
CHECKED: KY	DRAWING No. EA-BFPCL-GPMC-GGPL-FEED-PSE-DWG-003_9	REV.	
ENDORSED: AD	PROJECT No. 11998A	A01	
APP'D DATE: 12.DEC.2022	PROJECT No.		

ELEP-VTS-001
VENT STACK

SIZE (mm)DIA x (mm) T/T)	: 100/600 x 2200 (HOLD 1)
DESIGN PRESSURE (barg)	: 7
DESIGN TEMPERATURE MIN/MAX (°C)	: -50/80
OPERATING CONDITION (barg/°C)	: ATM/30
RATED CAPACTIY (mmscfd)	: 1

ELEP-FLAME-001
FLAME ARRESTOR

SIZE (mm)DIA x (mm) T/T)	: DN100 x XXXX (HOLD 1)
DESIGN PRESSURE (barg)	: 7
DESIGN TEMPERATURE MIN/MAX (°C)	: -50/80
OPERATING CONDITION (barg/°C)	: ATM/30
RATED CAPACTIY (mmscfd)	: 1

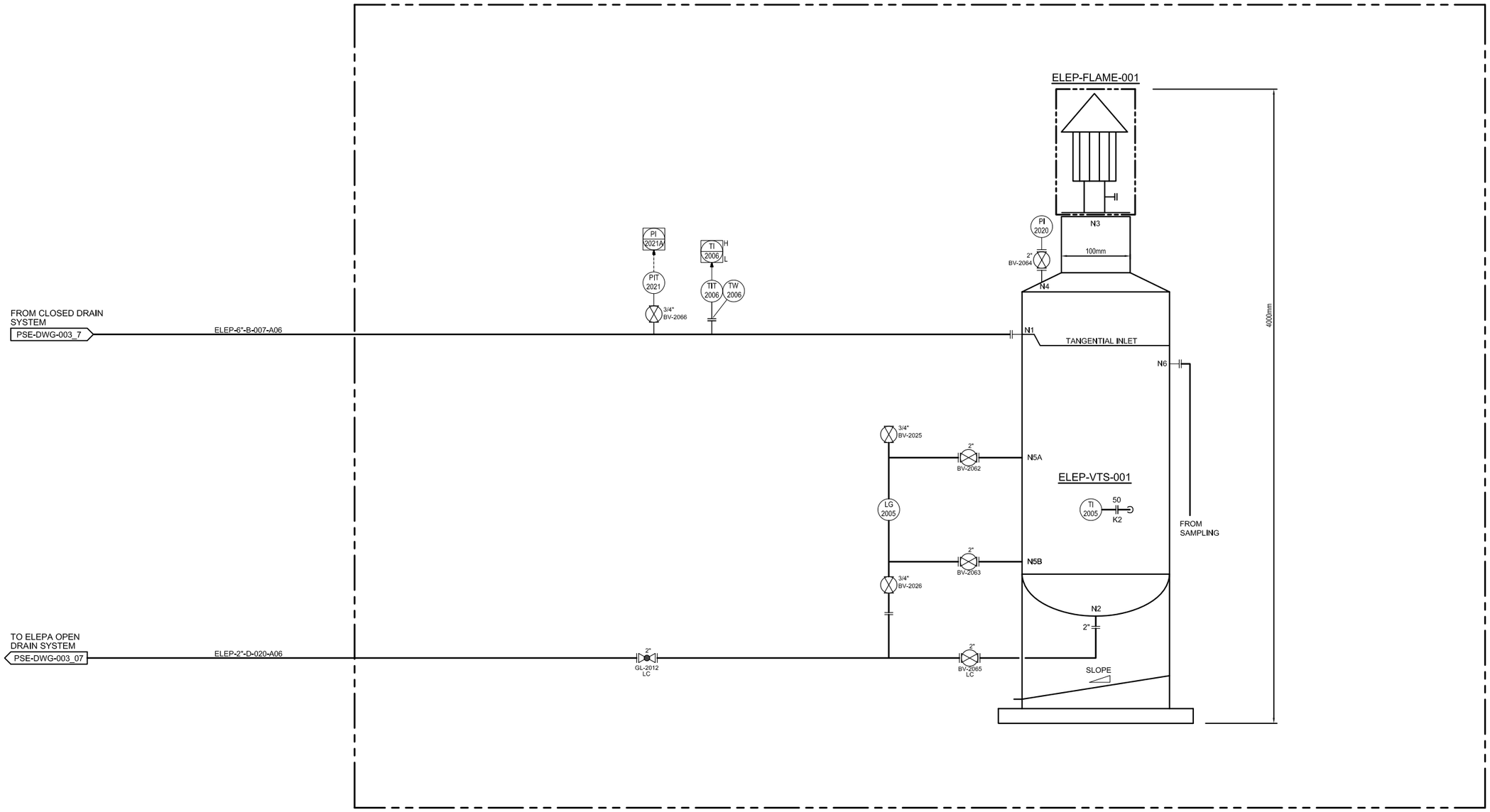

REFERENCE DRAWINGS	DRAWING No.

NOTES:

HOLD:
1: VENDOR TO CONFIRM SIZE DURING DED

REV		DRAWN	CHK	END	DATE
A01	APPROVED FOR DESIGN	FA	OJ	AD	12.12.2022
R02	ISSUED FOR REVIEW	FA	OJ	AD	21.10.2022
R01	ISSUED FOR REVIEW	FA	OJ	AD	08.09.2022
R00	ISSUE FOR IDC	FA	OJ	AD	05.09.2022

COPY RIGHT RESERVED

CONTRACTOR: epic ATLANTIC

ENDORSEMENT

RELEASED FOR	DESIGN ENGR.	BFPC TECH REP	SPDC TECH REP	DATE
REVIEW	KY	–	–	–

BRASS FERTILIZER & PETROCHEMICAL COMPANY LIMITED

brass fertilizer

GAS PROCESSING AND METHANOL COMPLEX PROJECT
FEED FOR GAS GATHERING PIPELINES

PROCESS SYSTEMS ENGINEERING
PROCESS ENGINEERING FLOW SHEETS (PEFS)
ELEP VENT

DRAWN: RO	DATE: 21.OCT.2022	SHEET: 11OF 13	
CHECKED: KY	DRAWING No. EA-BFPCL-GPMC-GGPL-FEED-PSE-DWG-003_10	REV.	
ENDORSED: AD	PROJECT No. 11998A	A01	
APP'D DATE: 12.DEC.2022	PROJECT No.		

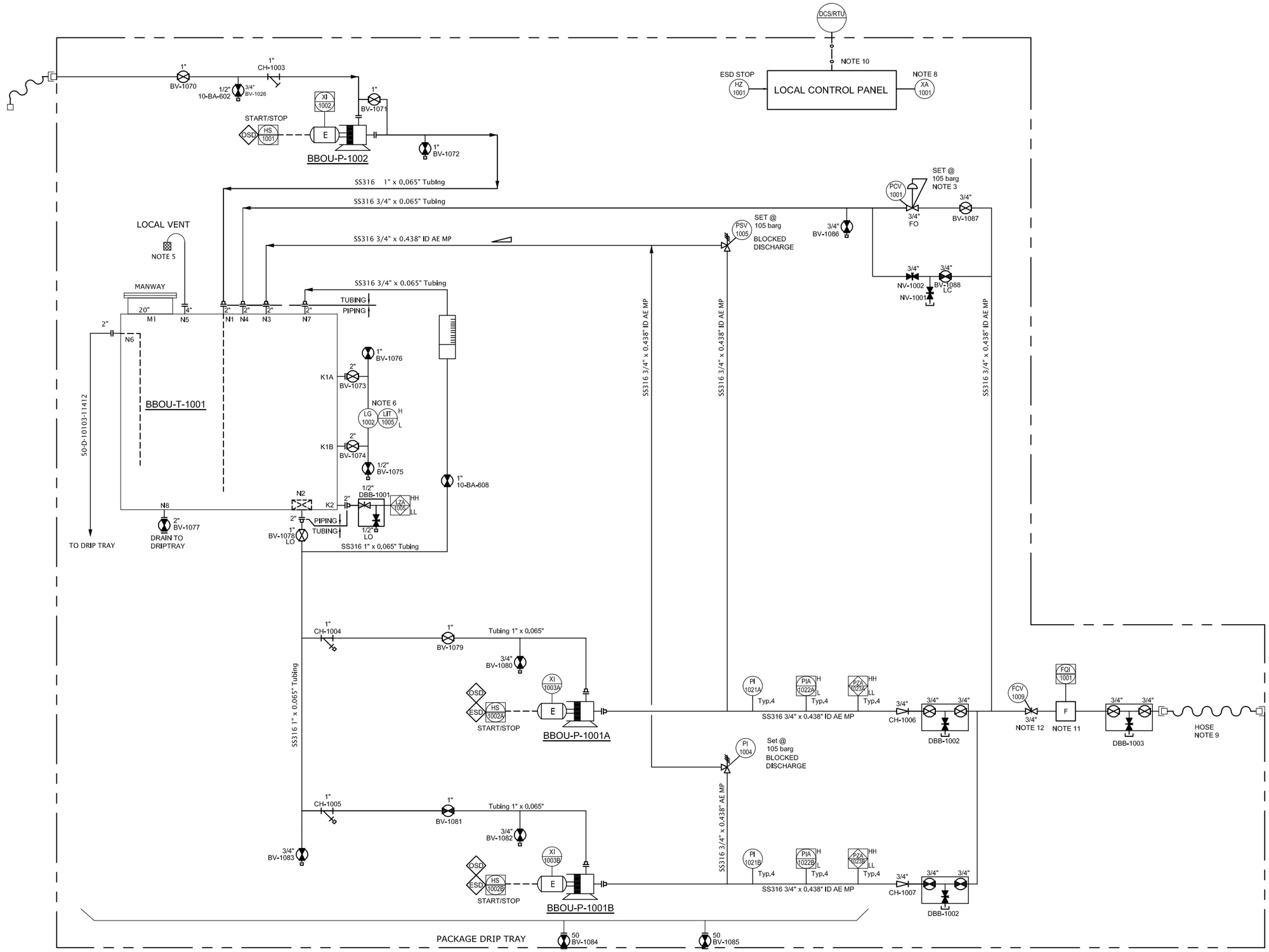

BBOU-P-1002	FILLING PUMP	HOLD 1
DESIGN FLOW (m3/hr)	2	
DESIGN PRESSURE (barg)	4.53	
DESIGN TEMPERATURE (°C)	0/90	
DIFFRENTIAL PRESS. (barg)	1	
RATED DUTY (kW)	0.55	

BBOU-T-1001	CORROSION INHIBITOR TANK	HOLD 1
CAPACITY (m3)	2	
DESIGN PRESSURE (barg)	0.06+FULL OF LIQUID	
DESIGN TEMPERATURE MIN/MAX (°C)	0/80	
OPERATING PRESSURE (barg)	ATM	
OPERATING TEMPERATURE (°C)	AMB	

BBOU-P-1001A/B	INJECTION PUMPS	HOLD 1
OPERATING CAPACITY (m3h)	1	
DESIGN CAPACITY (m3/hr)	1.245	
DESIGN PRESSURE (barg)	153	
DESIGN TEMPERATURE MIN/MAX (°C)	0/80	
OPERATING PRESSURE (barg)	100	NOTE 3
OPERATING TEMPERATURE (°C)	AMB	
DUTY (kW)	75	

NOZZLE SCHEDULE TB-204211 A/B

SR. NO	DESCRIPTION	SIZE
N1	INLET FROM P-1003	2"
N2	PUMP SUCTION	2"
N3	RV RETURN	2"
N4	PCV RETURN / RECIRCULATION	2"
N5	LOCAL VENT	4"
N6	OVERFLOW	2"
N7	CALIBRATION POT RETURN	2"
N8	DRAIN	2"
K1A/B	LEVEL GAUGE	2"
K2	DP LEVEL TRANSMITTER	2"
M1	MANHOLE	20"

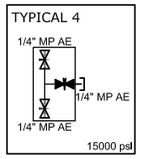

HOLD:

1. DATA TO BE CONFIRMED DURING DED BY VENDOR

REFERENCE DRAWINGS	DRAWING No.

NOTES:

1. ALL TAG NOS. PREFIXED ``10"
2. HOSE ASSEMBLY SHALL BE PROVIDED TO ALLOW FILLING FROM A BARREL. FILLING HOSE PART OF SCOPE OF SUPPLY.
3. OPERATING PRESSURE DEPENDENT ON MAXIMUM PRESSURE OF 100 barg.
4. POSITIVE DISPLACEMENT METERING PUMP. (WITH COLD STANDBY) FLOW RATE CAN BE SET BY MANUAL STROKE ADJUSTMENT.
5. INSECT SCREEN.
6. LEVEL GAUGE TO BE VISIBLE DURING FILLING.
7. TIE-IN CONNECTION TO WELL EQUALIZATION/HYDRATE INHIBITION MANIFOLD.
8. FIELD MOUNTED ALARM BEACON/HORN.
9. HOSE SHALL BE CONNECTED SUCH, TO AVOID WHIPPING ON FAILURE
10. COMMUNICATION LINK TO DCS AND RTU
11. THE FLOWMETER SHALL BE OF POSITIVE DISPLACEMENT TYPE.
12. THE METERING VALVE FOR 1:10 TURNDOWN FLOWRATE.

REV		DRAWN	CHK	END	DATE
A01	APPROVED FOR DESIGN	FA	OJ	AD	12.12.2022
R02	ISSUED FOR REVIEW	FA	OJ	AD	21.10.2022
R01	ISSUED FOR REVIEW	FA	OJ	AD	08.09.2022
R00	ISSUE FOR IDC	FA	OJ	AD	05.09.2022

COPY RIGHT RESERVED

CONTRACTOR: epic ATLANTIC

ENDORSEMENT				
RELEASED FOR	DESIGN ENGR.	BFPC TECH REP	SPDC TECH REP	DATE
REVIEW	KY	–	–	–

BRASS FERTILIZER & PETROCHEMICAL COMPANY LIMITED

brass fertilizer

GAS PROCESSING AND METHANOL COMPLEX PROJECT
FEED FOR GAS GATHERING PIPELINES

PROCESS SYSTEMS ENGINEERING
PROCESS ENGINEERING FLOW SHEETS (PEFS)
BBOU CHEMICAL INJECTION SKID

DRAWN: RO	DATE: 21.OCT.2022	SHEET: 12 OF 13	
CHECKED: KY	DRAWING No. EA-BFPCL-GPMC-GGPL-FEED-PSE-DWG-003_11	REV.	
ENDORSED: AD	PROJECT No. 11998A	A01	
APP'D DATE: 12.DEC.2022	PROJECT No.		

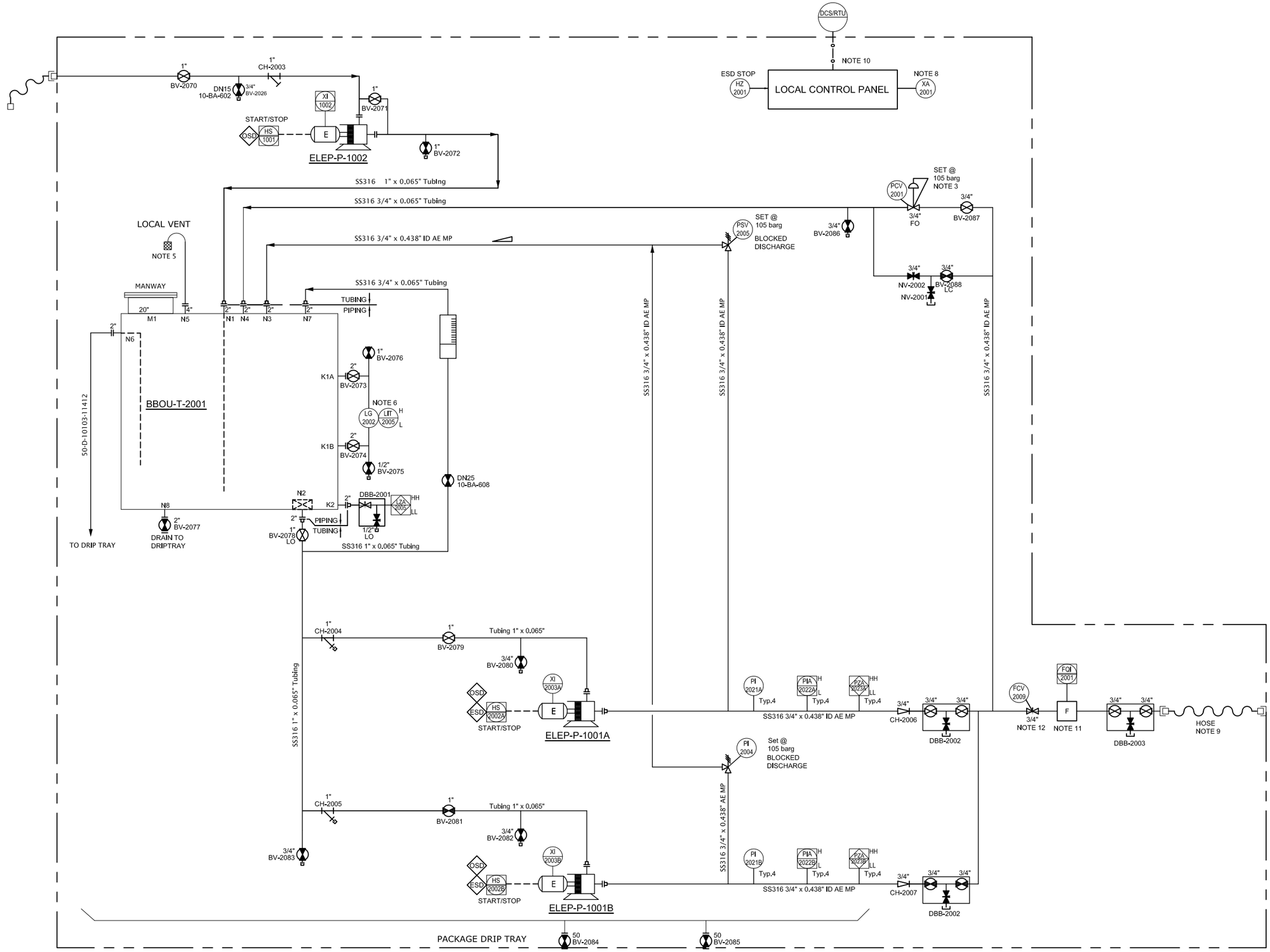

ELEP-P-1002	FILLING PUMP	HOLD 1
DESIGN FLOW	(m3/hr)	2
DESIGN PRESSURE	(barg)	4.53
DESIGN TEMPERATURE	(°C)	0/90
DIFFRENTIAL PRESS.	(barg)	1
RATED DUTY	(kW)	0.55

ELEP-T-1001	CORROSION INHIBITOR TANK	HOLD 1
CAPACITY	(m3)	2
DESIGN PRESSURE	(barg)	0.06+FULL OF LIQUID
DESIGN TEMPERATURE MIN/MAX	(°C)	0/80
OPERATING PRESSURE	(barg)	ATM
OPERATING TEMPERATURE	(°C)	AMB

ELEP-P-1001A/B	INJECTION PUMPS	HOLD 1
OPERATING CAPACITY	(m3h)	1
DESIGN CAPACITY	(m3/hr)	1,245
DESIGN PRESSURE	(barg)	153
DESIGN TEMPERATURE MIN/MAX	(°C)	0/80
OPERATING PRESSURE	(barg)	100 NOTE 3
OPERATING TEMPERATURE	(°C)	AMB
DUTY	(kW)	75

NOZZLE SCHEDULE TB-204211 A/B

SR. NO	DESCRIPTION	SIZE
N1	INLET FROM P-1003	2"
N2	PUMP SUCTION	2"
N3	RV RETURN	2"
N4	PCV RETURN / RECIRCULATION	2"
N5	LOCAL VENT	4"
N6	OVERFLOW	2"
N7	CALIBRATION POT RETURN	2"
N8	DRAIN	2"
K1A/B	LEVEL GAUGE	2"
K2	DP LEVEL TRANSMITTER	2"
M1	MANHOLE	20"

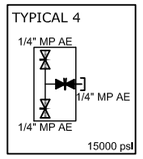

HOLD:

1. DATA TO BE CONFIRMED DURING DED BY VENDOR

REFERENCE DRAWINGS	DRAWING No.

NOTES:

1. ALL TAG NOS. PREFIXED ``10"
2. HOSE ASSEMBLY SHALL BE PROVIDED TO ALLOW FILLING FROM A BARREL. FILLING HOSE PART OF SCOPE OF SUPPLY.
3. OPERATING PRESSURE DEPENDENT ON MAXIMUM PRESSURE OF 100 barg.
4. POSITIVE DISPLACEMENT METERING PUMP. (WITH COLD STANDBY) FLOW RATE CAN BE SET BY MANUAL STROKE ADJUSTMENT.
5. INSECT SCREEN.
6. LEVEL GAUGE TO BE VISIBLE DURING FILLING.
7. TIE-IN CONNECTION TO WELL EQUALIZATION/HYDRATE INHIBITION MANIFOLD.
8. FIELD MOUNTED ALARM BEACON/HORN.
9. HOSE SHALL BE CONNECTED SUCH, TO AVOID WHIPPING ON FAILURE
10. COMMUNICATION LINK TO DCS AND RTU
11. THE FLOWMETER SHALL BE OF POSITIVE DISPLACEMENT TYPE.
12. THE METERING VALVE FOR 1:10 TURNDOWN FLOWRATE.

REV		DRAWN	CHK	END	DATE
A01	APPROVED FOR DESIGN	FA	OJ	AD	12.12.2022
R02	ISSUED FOR REVIEW	FA	OJ	AD	21.10.2022
R01	ISSUED FOR REVIEW	FA	OJ	AD	08.09.2022
R00	ISSUE FOR IDC	FA	OJ	AD	05.09.2022

COPY RIGHT RESERVED

CONTRACTOR

epic ATLANTIC

ENDORSEMENT				
RELEASED FOR	DESIGN ENGR.	BFPC TECH REP	SPDC TECH REP	DATE
REVIEW	KY	–	–	–

BRASS FERTILIZER & PETROCHEMICAL COMPANY LIMITED

brass fertilizer

GAS PROCESSING AND METHANOL COMPLEX PROJECT
FEED FOR GAS GATHERING PIPELINES

PROCESS SYSTEMS ENGINEERING
PROCESS ENGINEERING FLOW SHEETS (PEFS)
ELEP CHEMICAL INJECTION SKID

DRAWN: RO	DATE: 21.OCT.2022	SHEET: 13 OF 13	
CHECKED: KY	DRAWING No. EA-BFPCL-GPMC-GGPL-FEED-PSE-DWG-003_12	REV.	
ENDORSED: AD	PROJECT No. 11998A	A01	
APP'D DATE: 12.DEC.2022	PROJECT No.		